QHYCCD

User Manual
REV 1.1

QHY183C

Back-illuminated COLDMOS Astronomy Camera

QHYCCD

Contents

01 PACKAGE CONTENTS 3

02 SOFTWARE INSTALLATION 4

03 USE QHY183C IN SHARPCAP 6

04 COLOR BALANCE FOR QHY183C 8

05 USE QHY183C WITH ASCOM 10

06 USE QHY183C IN EZCAP_QT 12

07 USE QHY183C IN FIRECAPTURE 15

08 USE BROADCAST VIDEO STREAMING 16

09 QHY183C COLOR WHEEL CONTROL PORT 17

10 QHY183C GUIDE PORT CABLE RJ11 PIN SEQUENCE 17

11 FAQ 18

13 QHY183C MECHANICAL SIZE AND BACK FOCUS 23

14 SPECIFICATIONS 26

01 Package Contents

USB3.0 cable(1.5m)	1
Self-locking power cable	1
6pin guide cable	1
Car power adapter	1
Drying tube	1
desiccant	1
M42/1.25inch adaptor	1
Driver download card	1
Inspection report	1
Camera	1

Optional accessories

12V power adapter + power cable	1
C-adapter lens mount	1

02 Software Installation

1. Download and install the camera driver (link)

2. Download and install the ASCOM platform (link)

3. Download and install the ASCOM driver (link)

   As you most probably want to use your QHY183C as an expose camera, please download the Capture version. If you want to use it as a guide camera, please download the Guide version.

4. QHY183C camera uses SharpCap as the default capture software. Please download SharpCap. QHY183C camera can run on SharpCap 2.9 or later versions

   Note that for the latest version of SharpCap, QHY600 also needs the latest qhyccd.dll, for which QHYCCD has written the SharpCap Patch, please download and install it. You can also download from QHYCCD SDK page to obtain it. The original filename qhyccd_x64.dll. You can rename it to qhyccd.dll and overwrite the old file in SharpCAP X64 folder.

5. Connect QHY183C to your PC with USB3.0 cable. For the first time the system will find a new device and search the driver. You can skip the online searching by clicking "Skip obtaining driver software from Windows Update" and the computer will find the drivers. After installation is complete successfully, you can find the device in the device manager as shown in the picture below.

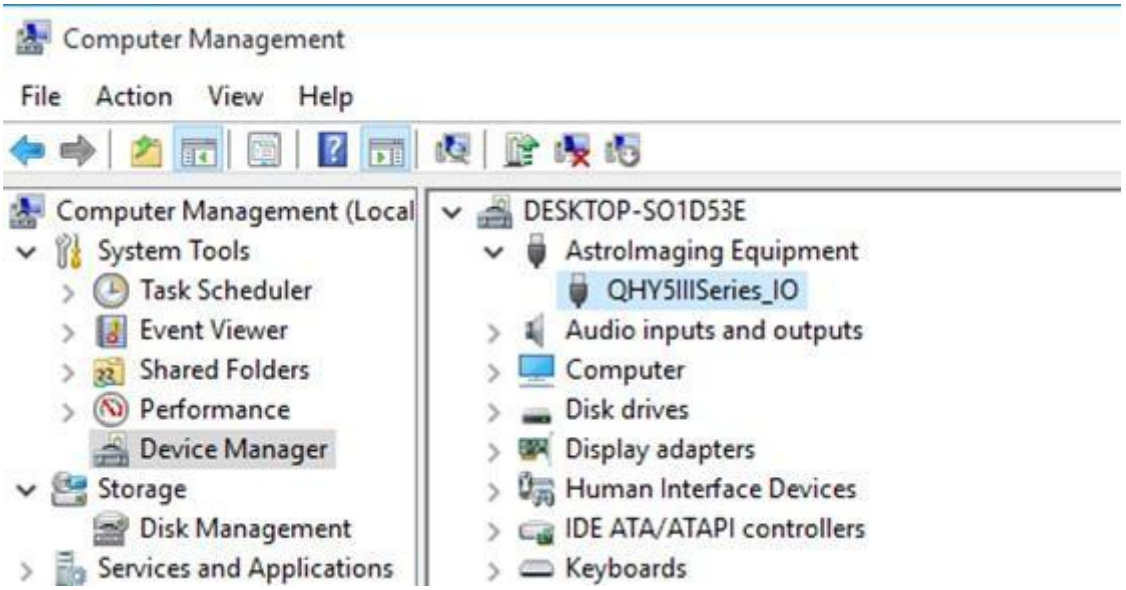

6. QHYCCD has developed a software named UpdateCheck that can check if the drivers installed on your computer are the latest versions as well as update the drivers if needed. If the status of some driver is “Need Update”, you can directly download its update package in this software freeing you from the inconvenience of looking for and downloading it from our website.
   Take QHY367C for example, you can see the drivers we need are the latest versions and don’t need to be updated as shown in the following picture.

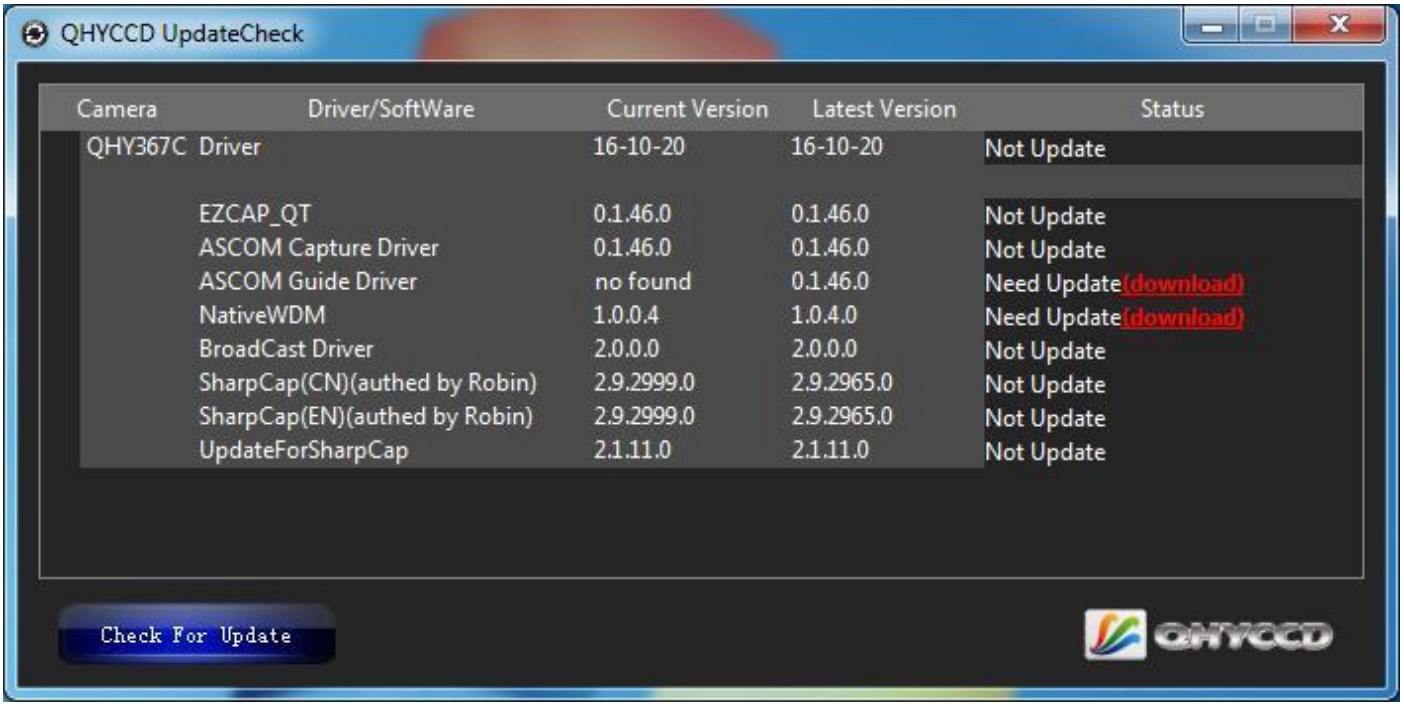

Note that after you downloading and installing the new drivers by using this software, be sure to pull the USB cable out and then plug it in to enable the new drivers.

03 Use QHY183C in SharpCap

1. Connect your QHY183C to 12V power supply. Connect your QHY183C to your computer with USB3.0 cable.

2. Run SharpCap. If the aforementioned software and drivers all have been installed properly, the video image will appear automatically and you will see the frame rate at the lower-left corner of the software as shown below

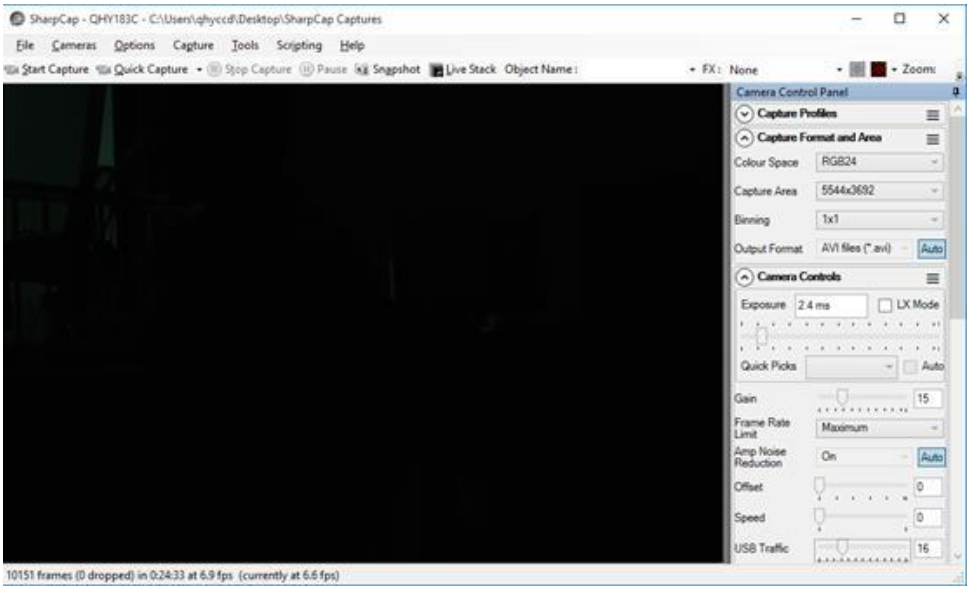

3. If you have started the SharpCap before connecting camera to your PC. You can click menu->cameras->rescan for cameras to search the camera and check on the camera name (QHY183C in this case).

4. To make sure the camera can run properly, the software will start the camera at the lowest speed, which makes the frame rate much lower than the highest frame rate declared on its webpage. Now you can try to get the most out of it by changing several settings. First you can try to set the exposure time to 1ms, then try to reduce the "USB traffic" value. For modern computer with i7-4 core, it should get the max performance. But please note that not all computers can get the best performance due to various reasons such as the CPU loading, the saving-energy mode setting, the mainboard performance and USB3.0 port performance. Sometimes the display size may also impede obtaining the best performance. So you can try to use the "Zoom" function to reduce the display size to see if it helps. Normally speaking the QHY183C can get more than 15FPS @ full 20mega resolution.
   The debayer may take the CPU time and sometimes it will limit the frame rate. You can use the RAW8 mode and select debayer OFF to get faster.

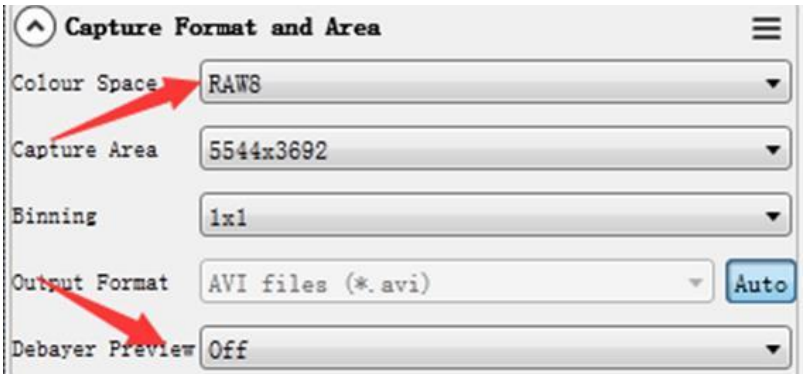

5. Adjust the offset. When you block the light thoroughly, you may find that the image is not really "zero" (entirely black). Sometimes this will lower the quality of image contrast. You can adjust the offset to make the histogram peak close to zero in order to get a better background. You can open the histogram to confirm that.

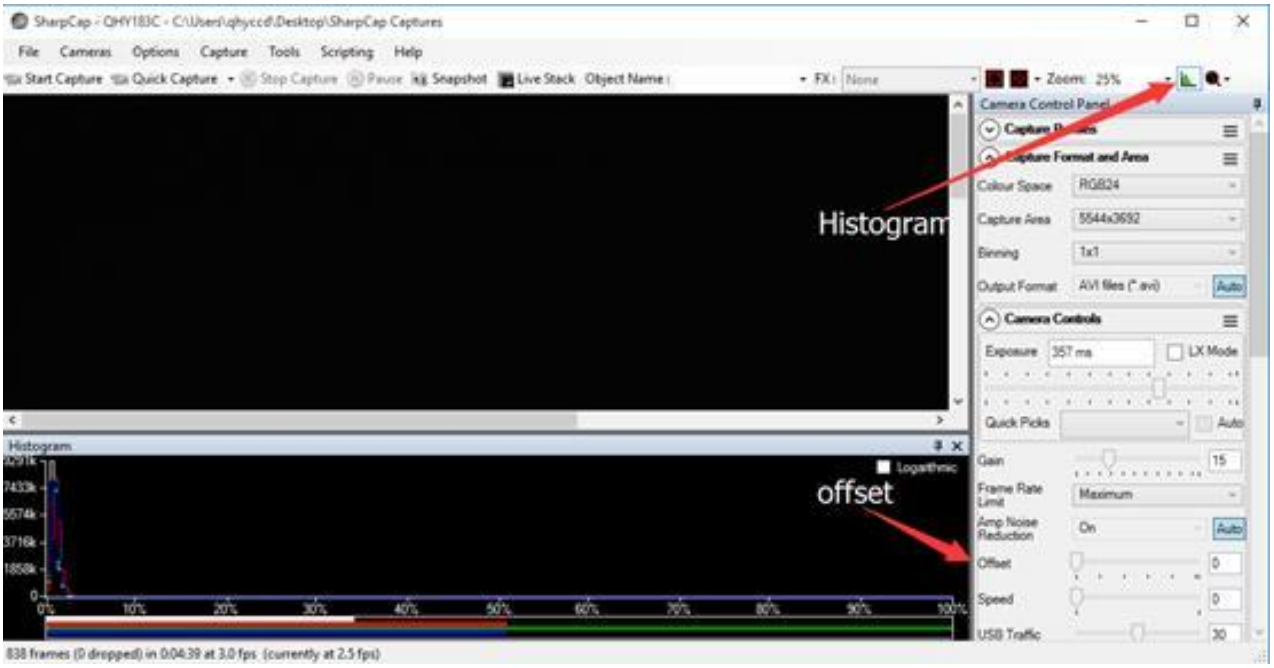

QHY183C is a color camera, so it is very important to set the offset to a low value and make the histogram peak close to zero. Because the color camera color balance is multiple a ratio to the pixel value in the FPGA. The bias will be multiple too and it may affect the color balance.

6. If you want to try 16bit image, you can switch the Colour Space to "RAW16".
7. By check the "LX" mode you can expand the exposure setting range and take long exposure shot. QHY183C camera has the anti-amp light control circuit and it can reduce the amplifier glow significantly. Note that it's impossible to reduce the glow in the corner thoroughly, and it's normal to see a very small amount of glow in the corner when you do long exposure.

A typical long exposure image in +25℃, 5 sec exposure and 50% gain of QHY183C is shown below.

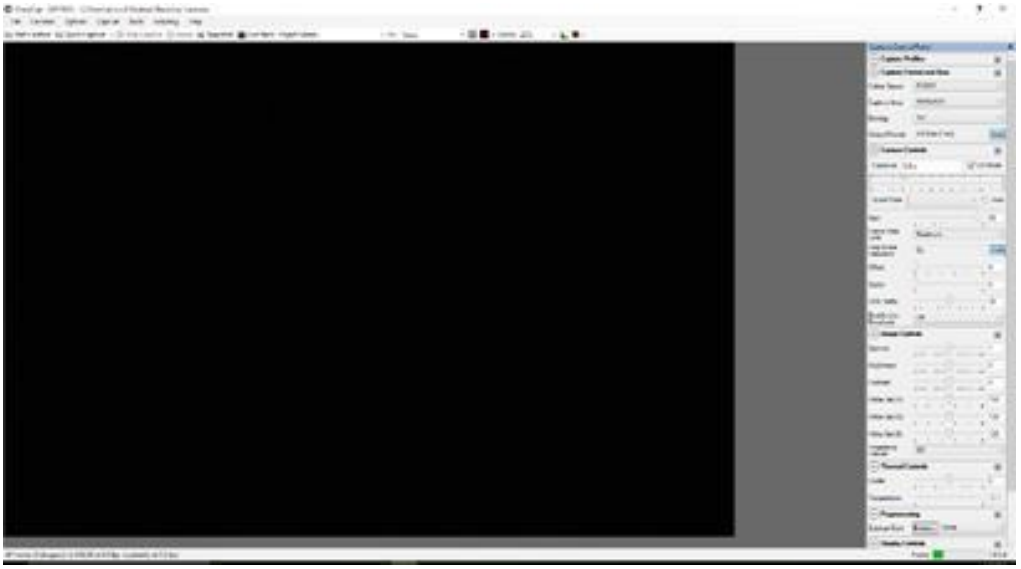

8. After you connect 12V power supply for QHY183C to power the TEC cooling circuit, you can set the CMOS sensor cooling temperature in the "Thermal Controls" section in SharpCap as shown in the following picture.

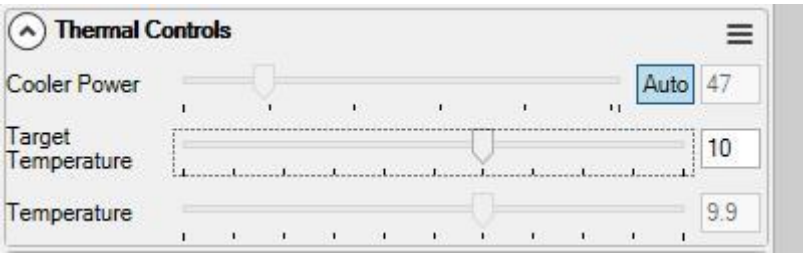

Basically, you can control the temperature of CMOS by either adjusting "Cooler Power" or clicking "Auto" and adjusting "Target Temperature". You can also see the CMOS temperature at lower-left corner of the software.

Before use this function, you should read the content about how to protect the cooler in the FAQ section.

04 Color Balance for QHY183C

SharpCap will start at the default RGB balance for color camera. Here is the screenshot of the QHY183C start up.

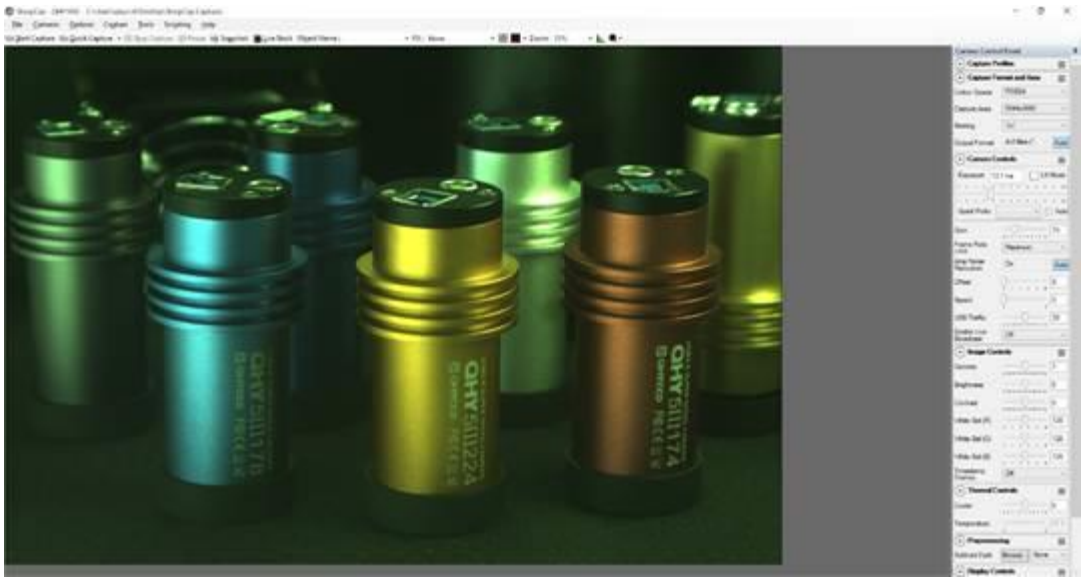

For color camera, SharpCap will show the WB Red/Green/Blue progress bar.
Since the color balance is the ratio between Red to Green and Blue to Green. You can fix the Green color to 128 and adjust the Red and Blue.

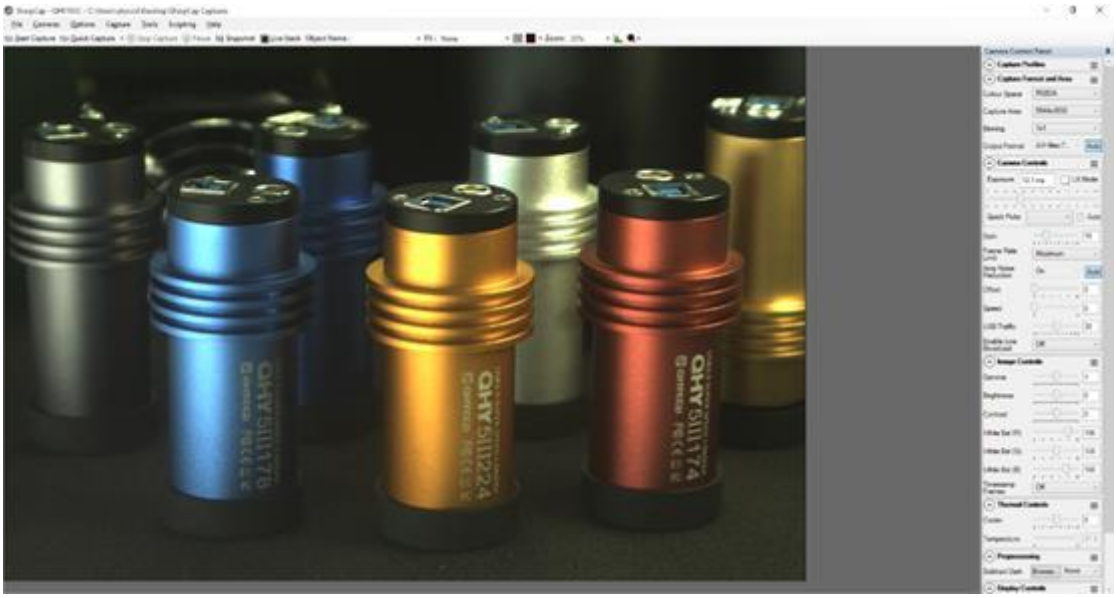

For example, in the image above the blue is 188 and red is 196, green is 128. It looks the image is well white balanced. If you need more blue, since it has limit of 255. In this condition, you can reduce the green a little and you will have more room for the ratio.

As we said before, if you are doing planetary imaging you should set the offset value as low as possible. To make the background close to zero. Then you can easy to get correct color balance. Otherwise it will not easy to get it. Sometimes the offset of an image is good but you cannot get good balance.
The reason is that the Color balance is a ratio of the RGB sensitivity difference. So we use a ratio to multiply the RGB value and get it done. But if there is a bias exist. The ratio will not be correct. For example, the G sensitivity is the double of R sensitivity.

G=2R In order to get white balance. We multiply a ratio of 2 to R
R'=2R= G so we get R=G

When a bias exist. The bias is a constant added to each pixel. So the image you see is:
R''=R + bias
G' '= G + bias = 2R+bias

Now the ratio R'': G''= (R+bias) / (2R+bias) and it is not equal to 1:2. It shows the bias will affect the true value of the R:G. And the ratio of R:G will vary when the image light changed. It is hard to correct with a fixed ratio. But for DSO capture, you should keep the offset above zero and avoid the background being cut off. A background from 1000-5000 is a good value (16bit mode) for DSO imaging.

05 Use QHY183C with ASCOM

You can connect many software that support ASCOM. Currently QHY183C only supports normal ASCOM connection and does not support the ASCOM VIDEO connection. Please note that QHY183C always transfers maximum bit depth by ASCOM to make the best DSO imaging performance. The image format is 16bit width and patch zero on low bit.

MAXIMDL

1. First you have to make sure that both ASCOM Platform and ASCOM driver have been installed. If not, please install it first.
2. Start MAXIMDL
3. Follow the instructions shown below to finish the setup

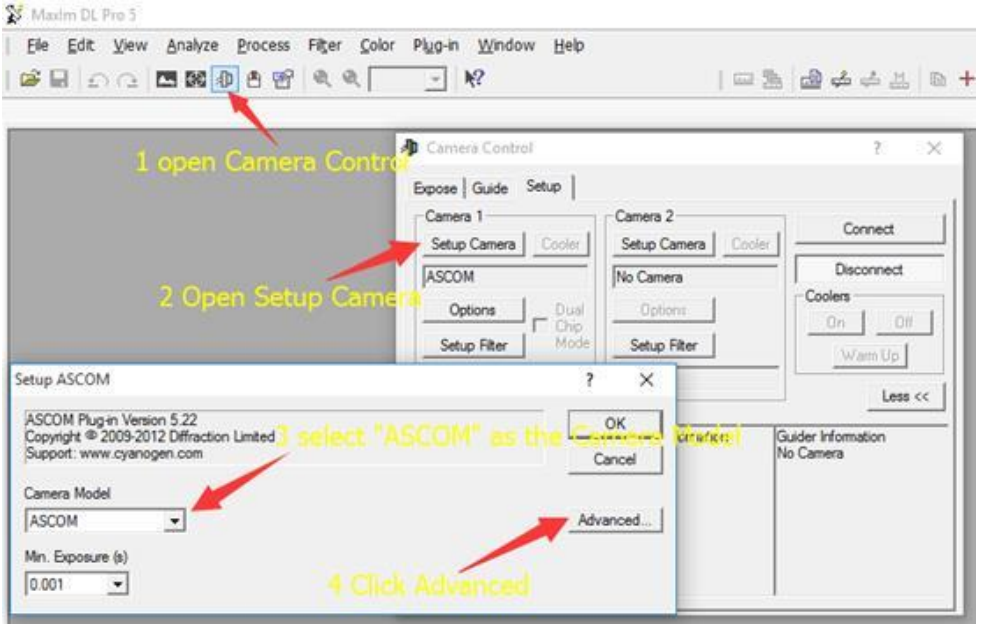

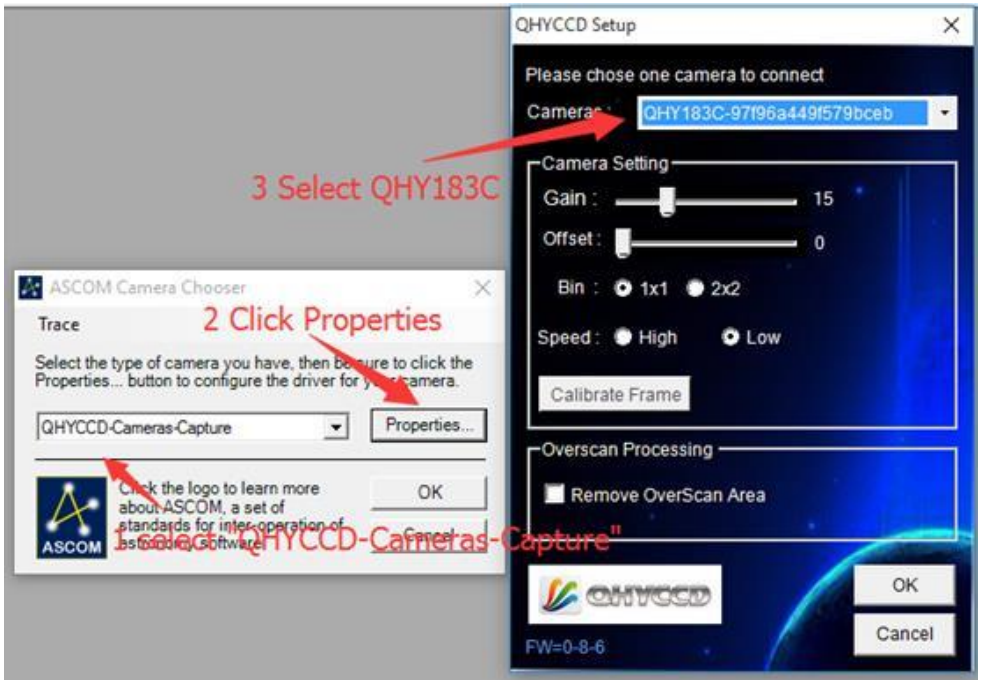

Normally, you can set the gain=1 and offset=10 to start. The speed and overscan calibration options are no use to QHY183C.

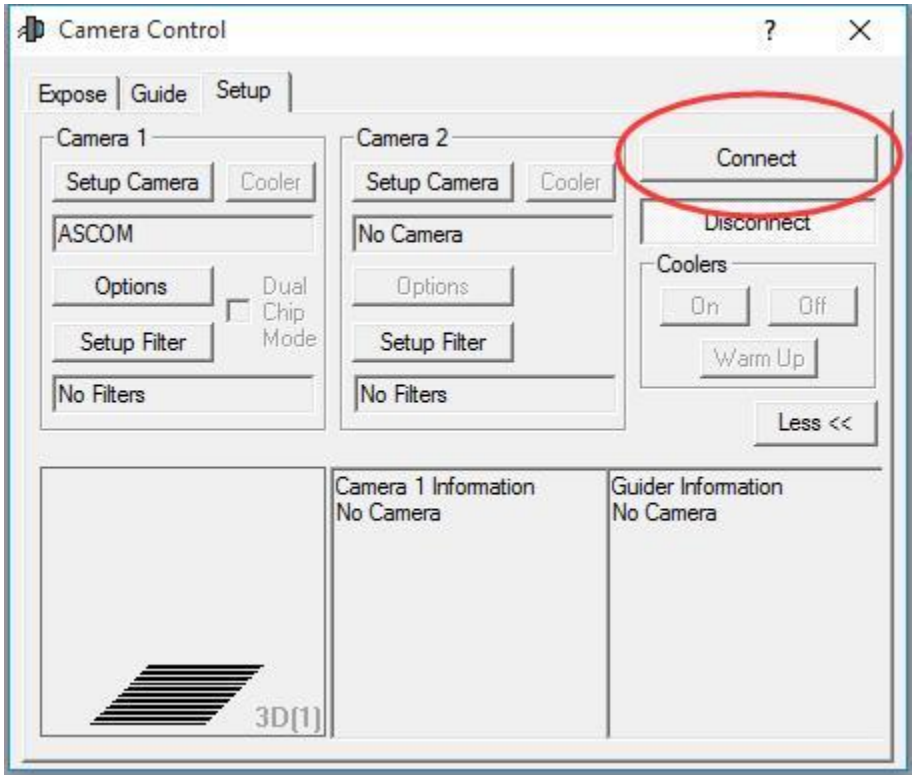

Click Connect before start shooting
The screenshot below shows QHY183C running on MAXIMDL.

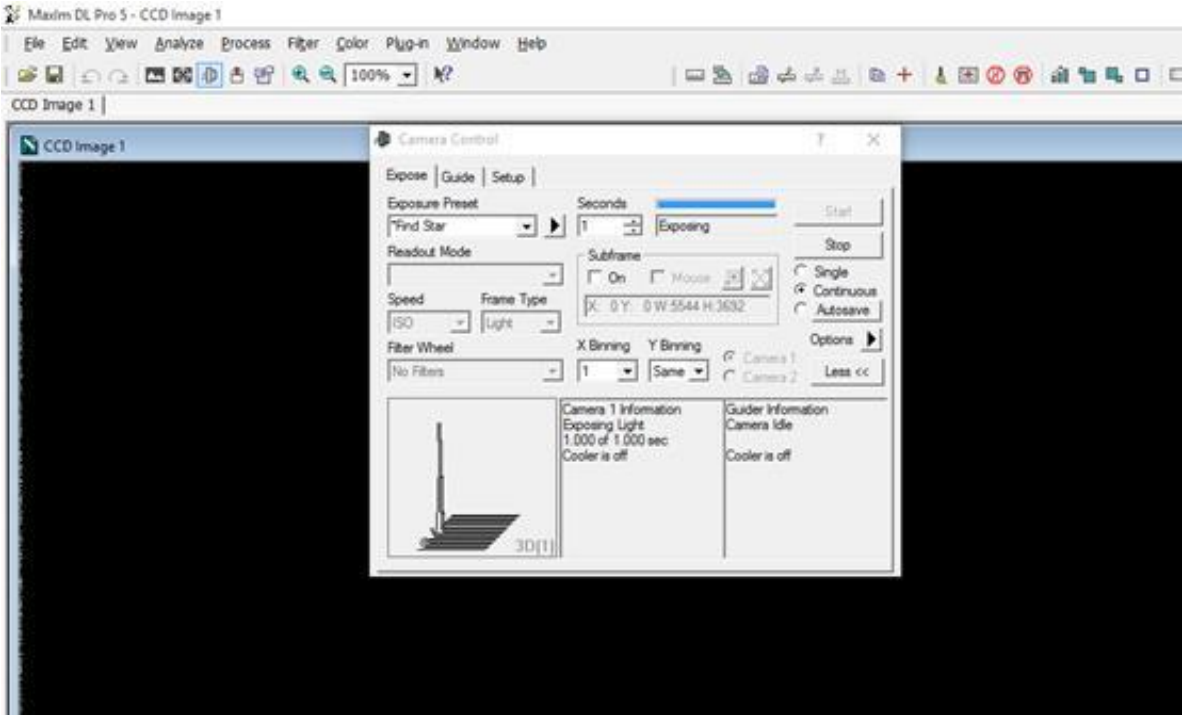

06 Use QHY183C in EZCAP_QT

*EZCAP_QT (**V0.1.51.18**)* is a software made by QHYCCD. This software has the basic capture function for QHYCCD deep sky cameras. You can use this QHY183C camera in this software.

1. Install EZCAP_QT software.

2. Connect QHY183C USB cable and also the 12V power supply cable

3. Run EZCAP_QT. Select “Connect” in Menu->Camera. If the camera is successfully connected. The title of EZCAP_QT will display the camera firmware version and the camera ID as shown below

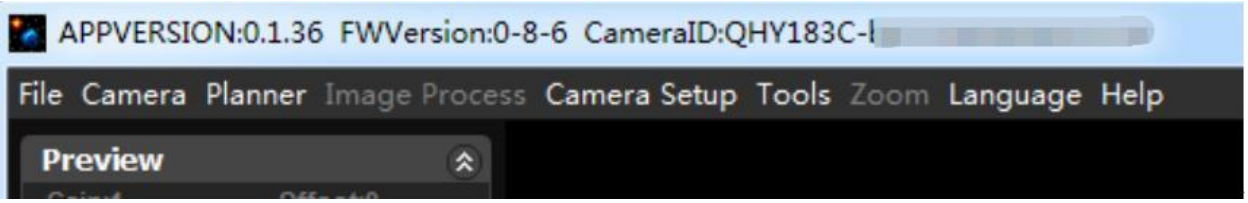

4. In Menu->Camera Setup, Click "Temp Control" and set the CMOS sensor temperature. You can enable the "Auto Control" and set the target temperature. For example here we set the temperature to -10C. The CMOS temperature will come to -10C very fast (in about 2-3minute). If you want to close the TEC, you can select "TEC OFF". If you just want to set the TEC power but not the temperature. You can select "Manual" and then set the percent of the TEC power.

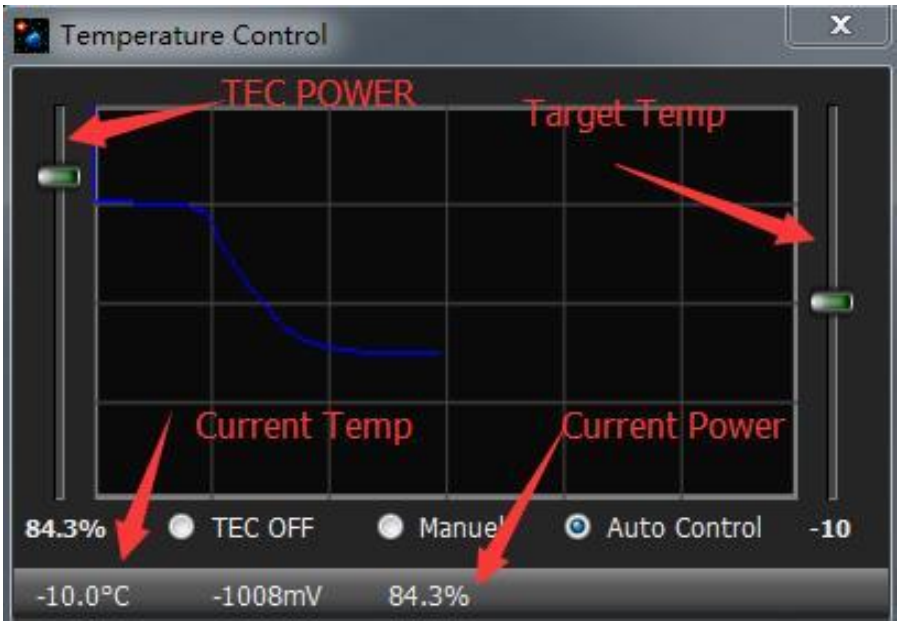

5. You can use the preview tab to do preview. And use the focus tools to do focus. Then use the capture tab to capture image. Here is a typical dark image at 60sec exposure, -10C. Stretch to full range.

Stretch to background. Normally speaking since the noise of the ADC, after heavy stretch you may see some random banding on the background. By stacking more image these banding will be gone since it is the random. This noise will not increase when you increase the gain. So the readout noise at higher gain is less than low gain. The QHY183C has about 2.7e at low gain and about 1e at high gain.

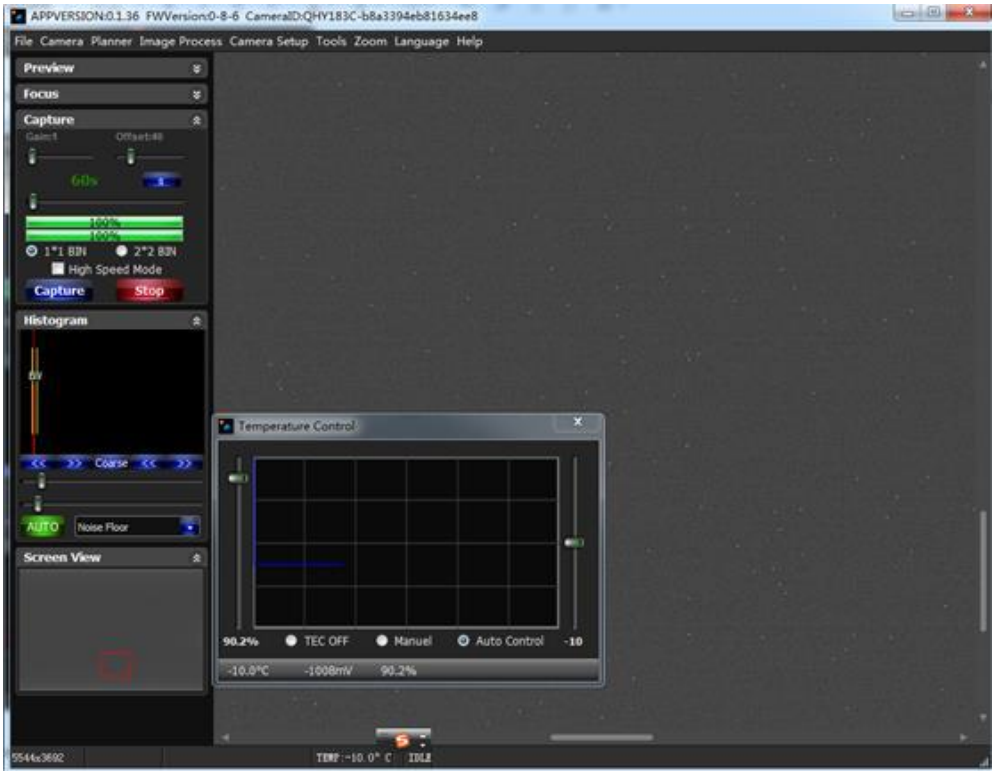

In EZCAP_QT there is a planner for image tasking. You can capture a series images by using the table below.

6. There is an image task planner in EZCAP_QT, you can take a series of images with reference to the following table.
7.

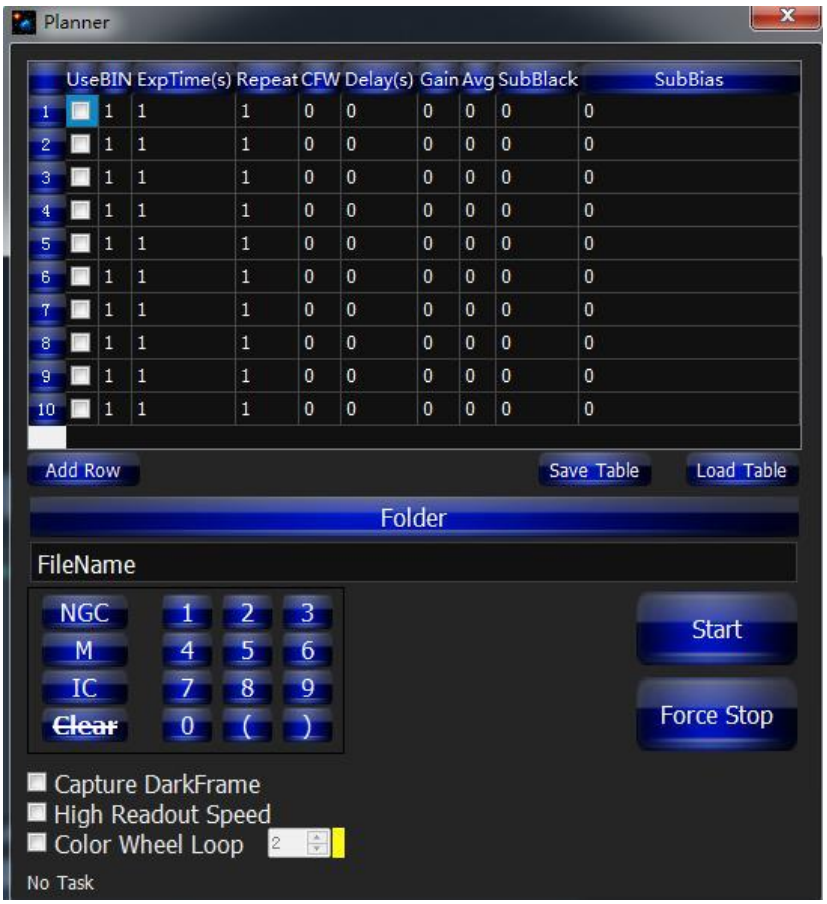

07 Use QHY183C in FireCapture

1. The latest FireCapture supports QHY183C already. Please go to FireCapture website to download its v2.5 BETA (32-bit) version.

By default, it will be installed in the "Documents" folder. After it was installed successfully, navigate to "Document folder", and you will find its installation folder as shown below.

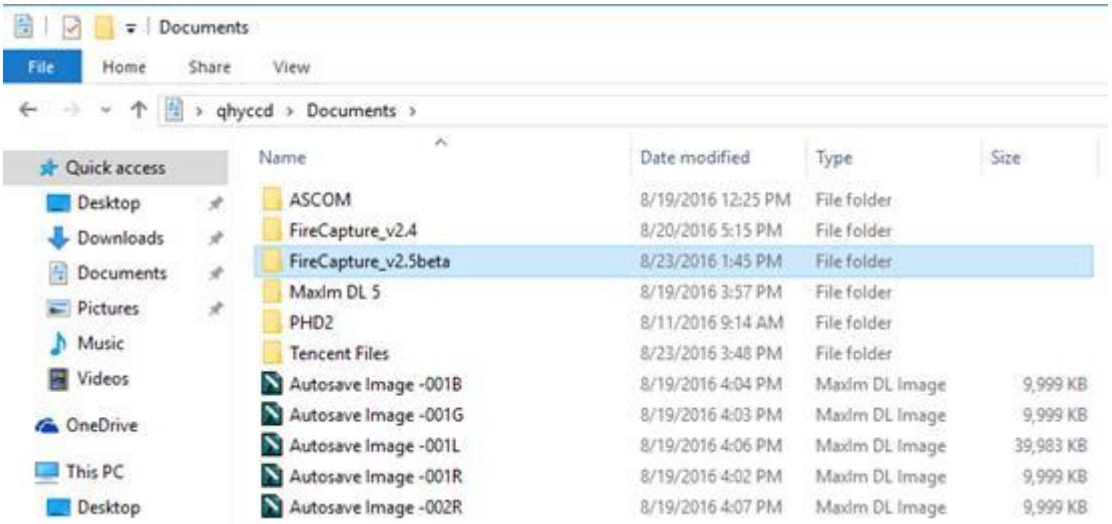

Enter that folder and run "FireCapture.exe", then select QHYCCD camera. And after the loading, you will see the image on FireCapture like shown below.

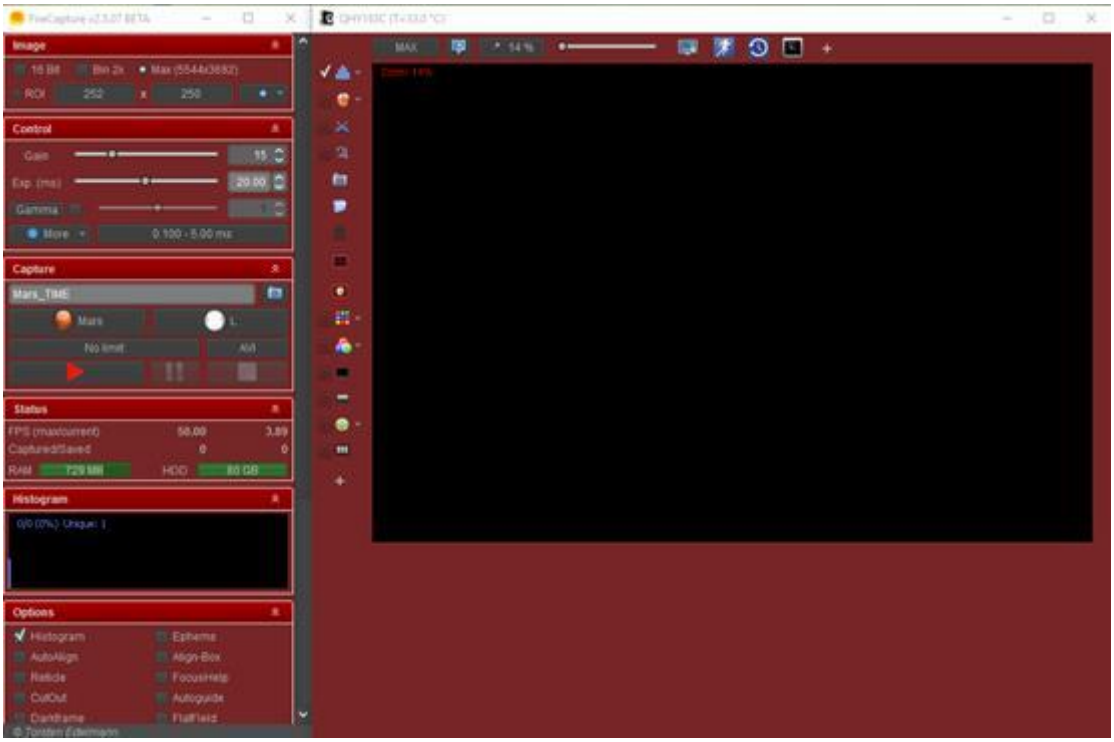

For detailed and helpful tutorial of this software, please go to its website to check the tutorial section at http://www.firecapture.de/

08 Use BroadCast Video Streaming

BroadCast video steaming is a special function that QHY183C supports. It can send the video image to multiple target software via QHYCCD BroadCast video driver. For example, you can use the SharpCap software to control the QHY183C camera and at the same time the video appearing on the SharpCap will be sent to any of software that support the WDM camera, like the HandyAvi, Adobe video encoder, online chat software etc. This function is very useful for the video live broadcast applications.

1. Install the BroadCast Driver

2. Connect QHY183C to your PC and start SharpCap

3. Turn on "Enable Live Broadcast" at the bottom of Camera Control panel in SharpCap as shown below.

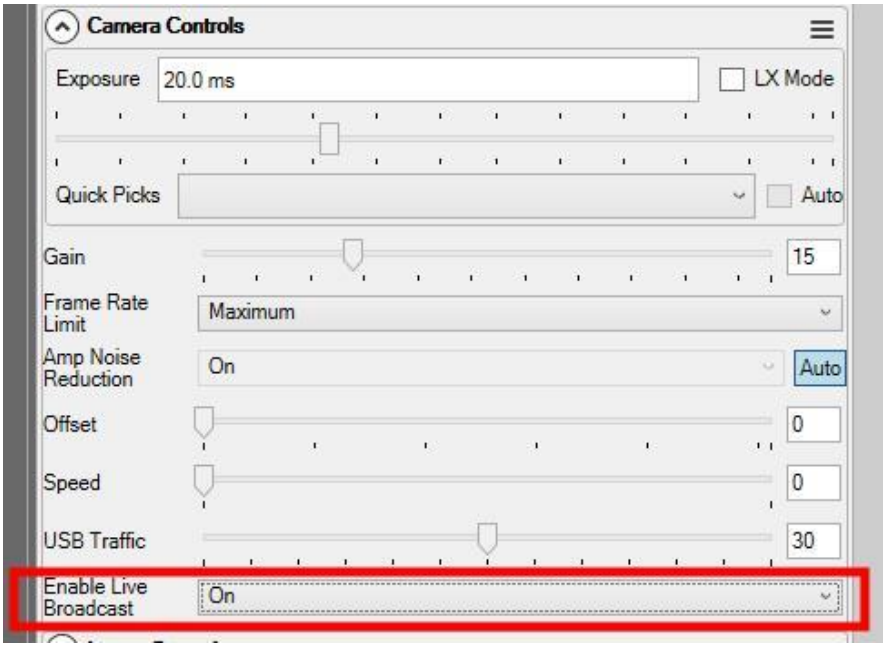

4. Select "QHYCCD camera (WDM)" as your webcam in the software you are using.

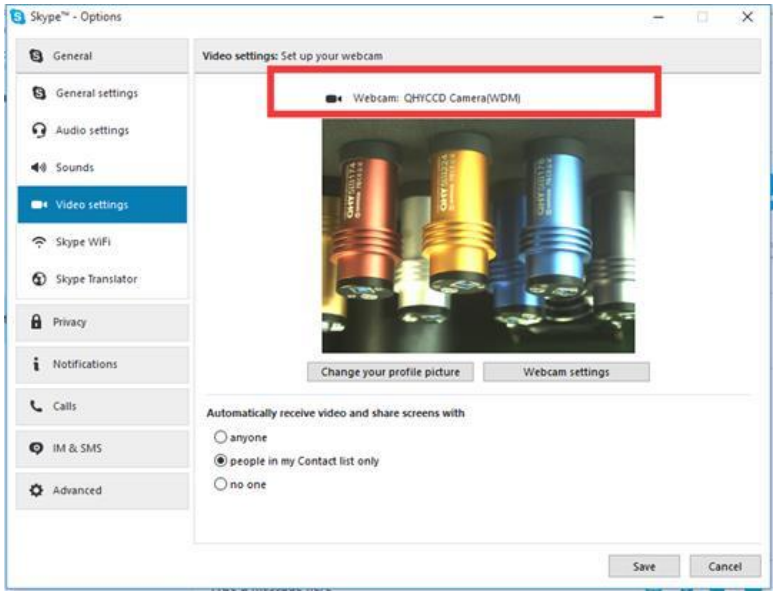

09 QHY183C Color Wheel Control Port

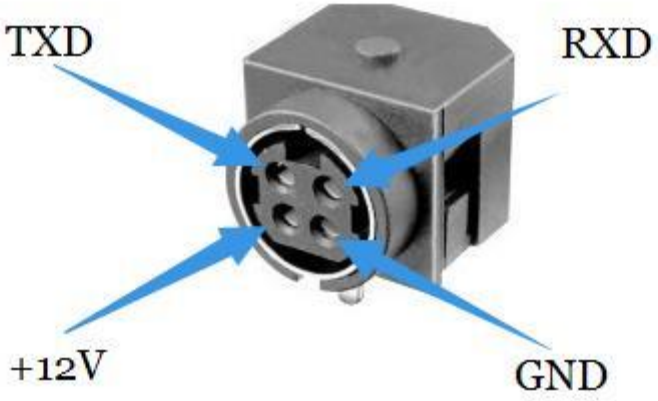

Pin number arrangement

Note: The TXD and RXD is standard RS232 level (+-10V). Not the TTL standard.

10 QHY183C Guide Port Cable RJ11 Pin sequence

This connector is fully compatible with the EQ5/EQ6/Celestron/ iOpton Guide Socket. The Pin Sequence is (When face to the connector of the cable)

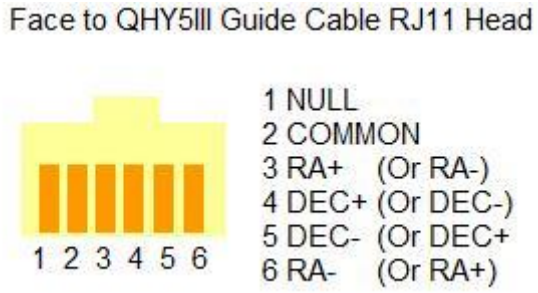

The Socket side (mount side) is

If you are using other mount, please check if it is the same pin sequence with the HEQ5/EQ6/Celestron/iOpton.

11 FAQ

1. Does QHY183C support 10bit or 12bit?
QHY183C supports both 10bit and 12bit output(For 10bit, it is 0-255, and it only uses the high 8bit, for 12bit it is 0-4095 map to 0-65535).

2. How to get maximum FPS?
Since QHY183C has very high data bandwidth. Not all computer can get the maximum FPS. Normally I7-4core should have no problem for that. The CPU loading will also affect the maximum FPS. So please reduce the CPU load by close other applications when using camera. If the CPU load is too high, the software may become very slow or hang.

3. How to avoid the camera hanging?
If you camera always hangs. It may be caused by many reasons. You can check the following things.

3.1 If your computer is via chipset, or some type of the mainboard. In SharpCap it cannot get image at all. (But in ASCOM it works well). In this condition, you need enable the DDR buffer of the camera. Current SharpCap does not support the enable DDR function. The next version SharpCap will support it.

3.2 If there is power leak for your mounts and computers? The power leak may cause the leak current transfer from computer to the camera via the GND. This may affect the USB transfer and cause the data packet lost and cause it hang. You need to make sure the computer and the mount is well grounded.

3.3 If the USB port's voltage not enough? Some computer's USB port +5V is not enough. It may cause the camera always hangs. In this condition you can use a powered USB3.0 HUB to connect camera and get the good +5V power for camera.

3.4 If your CPU load is too high? If CPU load is too high, it will cause many frame lost and cause the camera hangs. You can increase the USB traffic value to reduce the FPS and get more stable video transfer.

3.5 If the USB cable connection is good enough? Sometimes the contact issue in the USB cable to camera or USB cable to computer will cause the signal loss and cause camera to hang. Especially when you move the cables. In this condition. You can try to add a little silicon oil into the USB socket/plug .This can increase the contact a lot better.

3.6 Avoid the statics. Sometimes the static electricity on human body will cause the camera to hang. You can touch the computer metal case for first before touch the camera to let the static electricity on your body release.

3.7 Some computer's front USB port is not so good for high speed transfer (The reason is it connected to mainboard by a cable and which has no good signal integrity). If you found the camera always hang on front USB port. You can try the USB port on backside of the computer (which is connected to chipset directly on the mainboard).

4. What's the interface to telescope? How to use C/CS lens on QHY183C?
QHY183C supports C lens but currently doesn't support CS lens. You need order the optional C adapter for QHY183C. With this adapter the back focal is 17.0mm and you can use the C-mount lens with it. Since this sensor is one inch, you need to choose the lens which can cover the one inch image circle.

5. How to clean the CMOS sensor and the optic windows of the camera?
If you found there is dust on the CMOS sensor. You can screw off the front part of the QHY183C. The QHY183C's CMOS sensor has the AR coating so you need to be careful to clean it. You can use the clean kit for DSLR sensor to do it.
The optic window is the IR cut coating or AR coating. So you need to be careful when cleaning it. You can also use the DSLR clean tools or the lens paper. Don't use strong force to clean it. The coating is not so hard and it is easy to get scratch when you use strong force on it.

6. How is the anti-amplifier function in QHY183C?
QHY183C camera has the anti-amp light control circuit and it can reduce the amplifier glow significantly. Note that it's impossible to reduce the glow in the corner thoroughly, and it's normal to see a very small amount of glow in the corner when you do long exposure.
This is a demo picture for the QHY183C glow in 60sec exposure and high gain. Dark frame calibration can remove it completely.

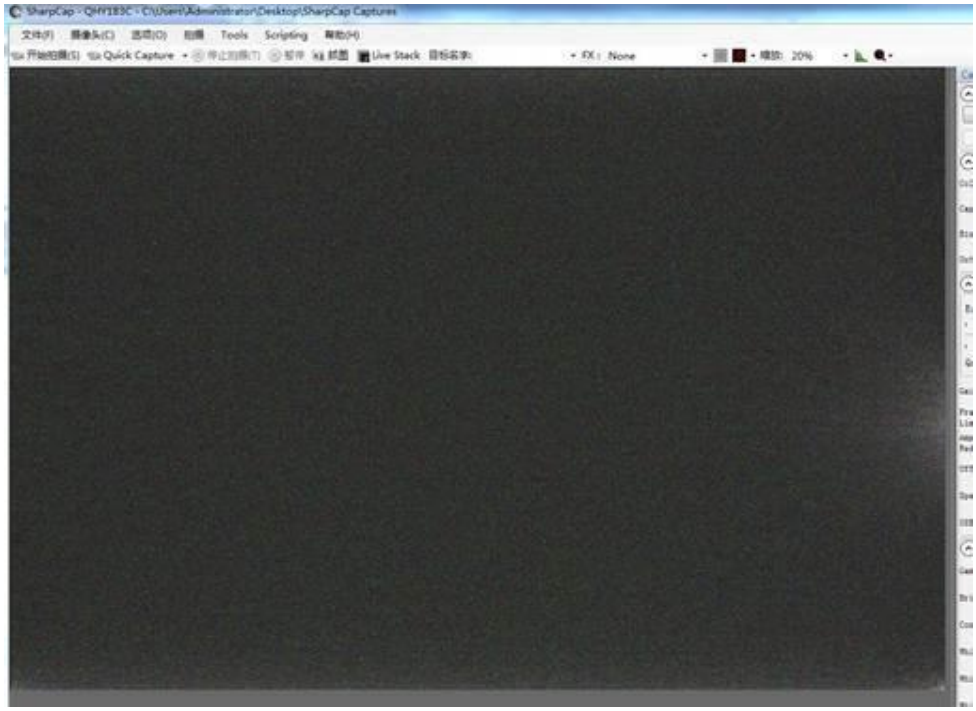

7. What's on-camera DDR buffer and what is benefit for?
The QHY183C has the on-camera 128MB DDRII image buffer. It brings two advantages: It can buffer whole image and avoid it lost during USB transfer. Because CMOS sensor outputs the image continuous after exposure end and it does not allow the pause. But the computer may have some pause due to the multi-task feature of the windows. If the pause is too long, the small buffer in the USB transfer chip will full and the coming image data will lost. And it will cause one frame is lost some data and this frame will be a bad frame. For short exposure it maybe not cause big problem because the next frame will comes soon. But for long exposure it means you lost a long exposure frame. The 128MB DDRII buffer can solve this problem by storing the whole frame into it and transfer. Even the computer has big pause it will not lost data.

Another advantage is that it will make the video more smooth when in some slow computer or some mainboard which is not friendly to USB3.0(like the VIA chipset) . In these computers they cannot handle the high speed USB data well and the data is always lost. With this DDR it can buffer the input image data and then send to computer. Even the high frequency pause happens, it can keep the USB data lossless.
SharpCap version has options for enabling/disabling the DDR buffer. The current ASCOM driver is always working under DDR enabled mode.

8. What's the QE of QHY183C?

Sony has not released the absolutely QE curve of the IMX183 sensor. Here is the relativity QE curve. It is just the normalization QE. Normally speaking the BSI sensor has a very high QE. Please refer this topic http://qhyccd.com/bbs/index.php?topic=5485.0

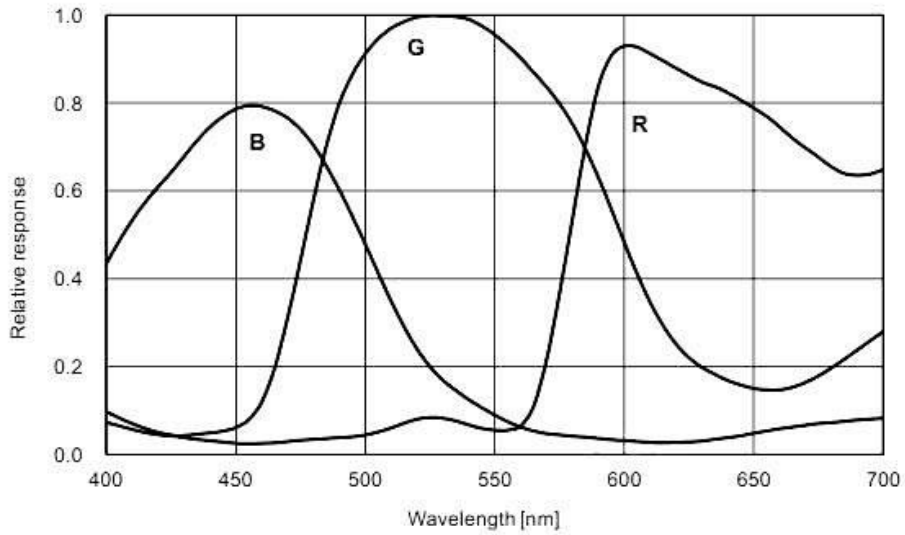

9. What's the unity gain and other performance data?

The unity gain (1e/adu) is Gain=11

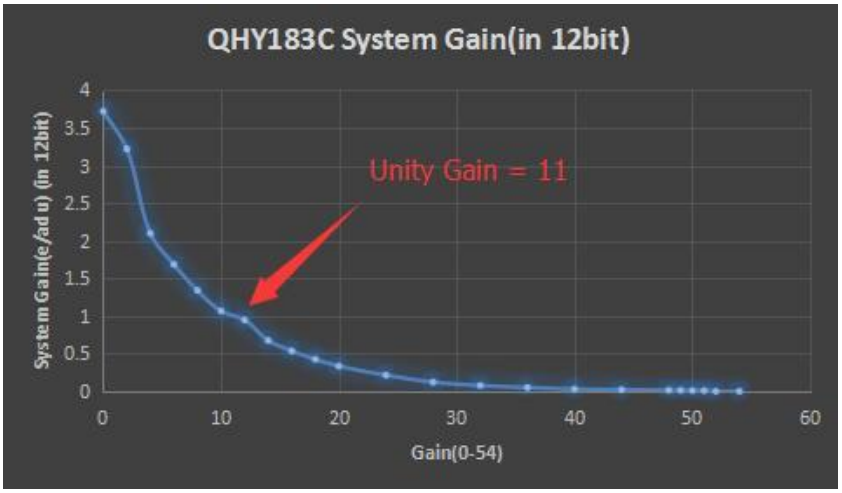

Here is the readout noise curve. The noise is about 2.6-2.7e at zero gain, 1.5e at unity gain and minimum 0.5e at gain=50.

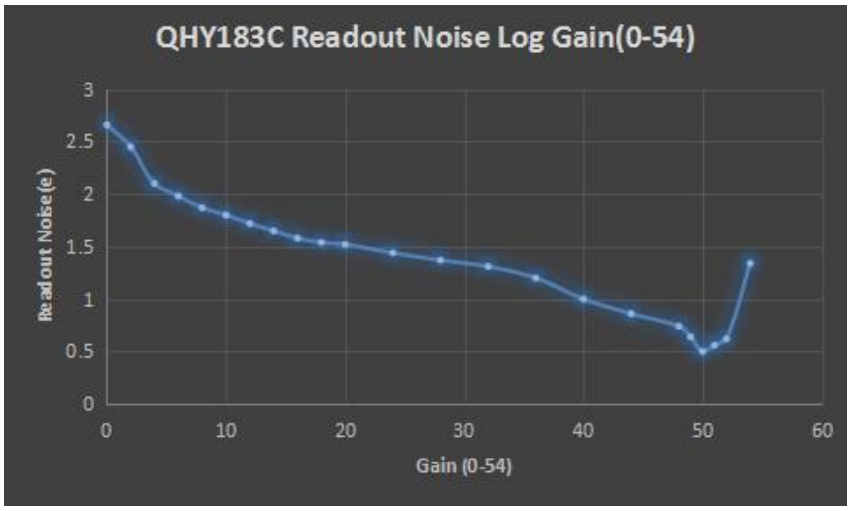

This is the fullwell curve. The fullwell is 15.5ke when zero gain. about 4ke@unity gain. Less than 100e at gain50.

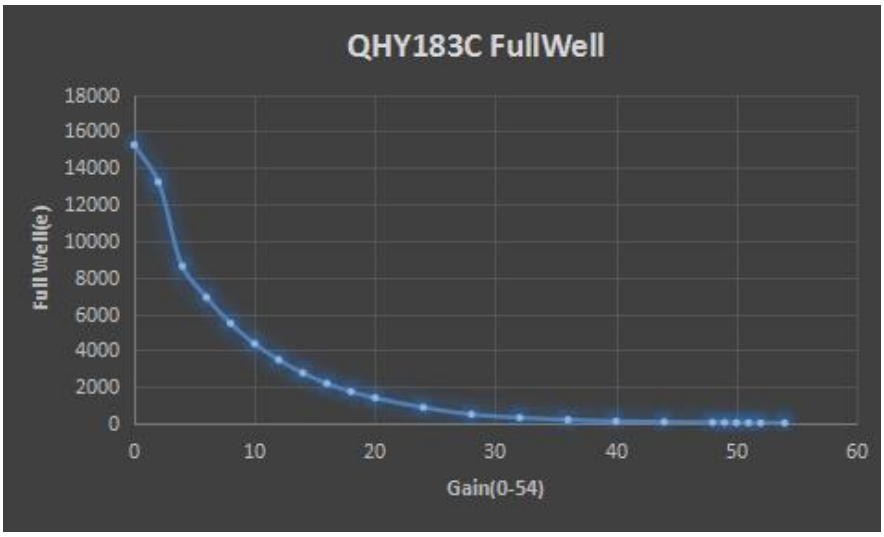

10. How to protect the cooler in QHY183C?

The cooler in QHY183C can lower the CMOS temperature to a value that's almost 40 degrees centigrade below the ambient temperature. So you need to be careful to avoid thermal shock, which means that when the cooler's temperature rises or fall dramatically, the cooler is subjected to strong internal stress due to contraction principle. Drastic thermal shock can shorten cooler's service life or permanently break it.

So when you begin to adjust the CMOS temperature, you should avoid setting "Cooler Power" to its maximum value, and you should gradually turn up the "Cooler Power" value. When you turn off the power, if the "Cooler Power" value is very big, you should gradually turn it down before turn off the power.

11. The FPS of cameras sometimes suddenly drops to zero under DDR mode on SharpCap, what's the solution for this problem?

Recently, we have been told by our users that the FPS of their cameras sometimes suddenly drops to zero under DDR mode on SharpCap. It is caused by the fact that the receiving speed of computer is relatively slower than the sending speed of camera. Once CMOS sensor starts working, it will incessantly conduct exposure and output image data over and over again, and it cannot be interrupted. If USB transmission was interrupted too often by the operating system, the data overflow of DDR would ensue resulting in bad frame. Therefore, not a single frame is a complete frame, and the FPS will drop to zero.

Solutions:

The first solution to this problem is to increase the value of USB traffic to decrease the FPS of the cameras. Note that by using previous version of SharpCap Patch, the value of USB traffic cannot be set to a value large enough, so you should go to our website to download the latest version of SharpCap Patch.

The second solution to this problem is to turn off the DDR mode, but for computers whose performance isn't very good, this solution may not work very well.

12 Camera Maintenance

Drying the CCD Chamber

The CCD sensor is located in a CCD chamber. This chamber is air-proof and connect to the socket of the silicone gel tube on one side of the QHY183C front case. If there is moisture and cause the CCD sensor glass get dew. You can connect the silicone gel tube on the socket to dry it.

Please put the effective silicone gel into the silicone gel tube. Make sure this is a cotton inside to prevent the silicone gel get into the CCD chamber.

Avoid CCD chamber optic window get dew

If the environment humidity very high, the optic window of the CCD chamber may get dew. The QHY183C has the build-in heat board on this optic window to heat the optic window to avoid it. In most conditions it can take effect.

If the optic window still get dew please try the following method.

1. Avoid the CCD Camera face down to ground. The cold air is heavy than warm air, if you put the camera facing down to the ground, the cold air is easy to get the optic window and cause it very cold and get dew
2. Increase the temperature of the CCD sensor. You can increase the CCD sensor temperature a little to prevent the optic window get dew.
3. Check if the heat board working. If the heat board not working, the optic window is easy to get dew. Normally the heat board can get about 65-70C in +25C environment. If it is not so warm, it maybe the problem of the heat board damaged. Need to contact QHYCCD to replace one heat board.

13 QHY183C Mechanical Size and Back Focus

The Mechanical Size and Back focal Length (in optic) of QHY600 Early Bird Price Version and Professional Version

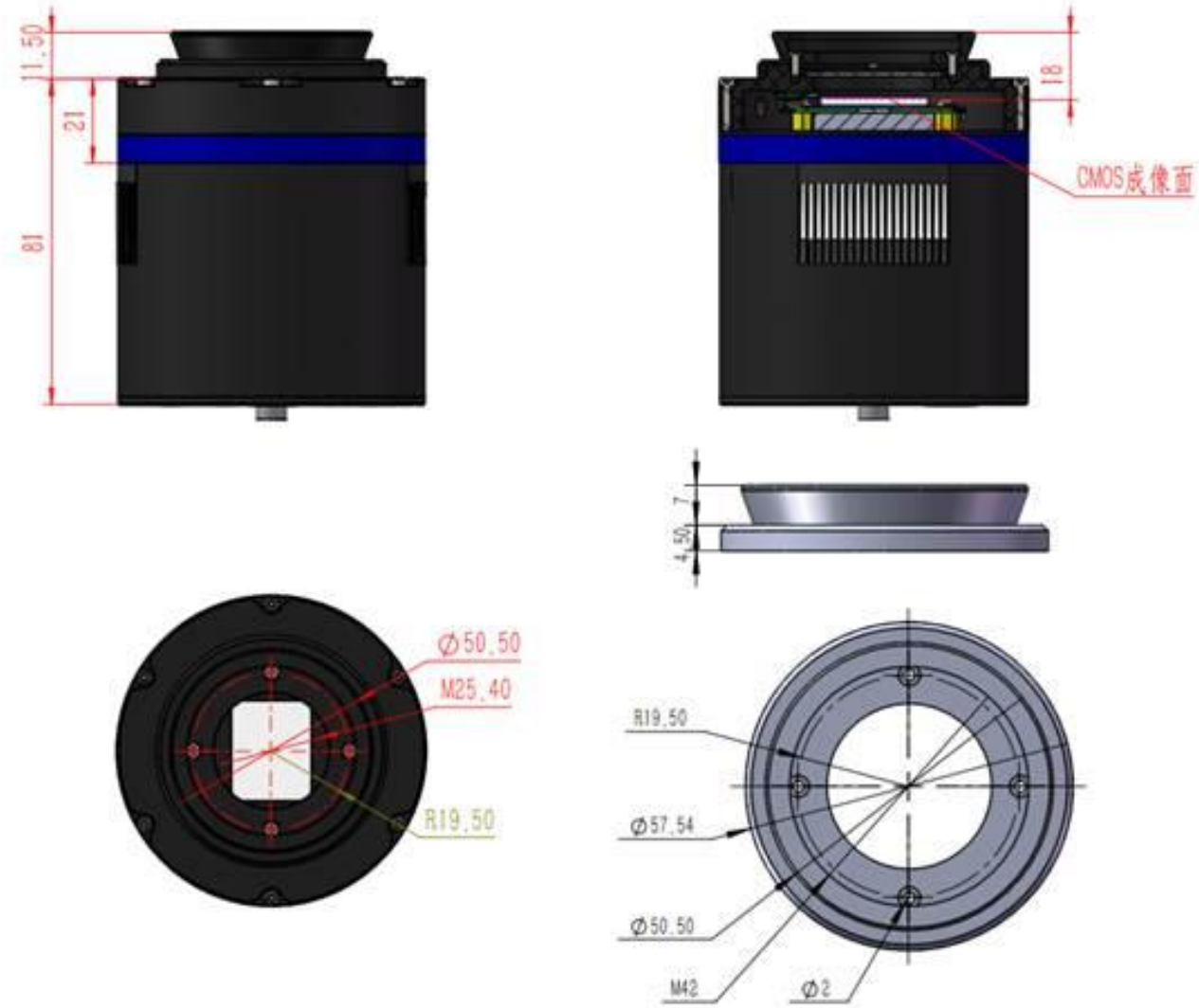

Drawing of QHY183C with a M42 lens mount
The back focal length of QHY183C with M42/2inch lens mount is 17.5mm to 18 mm.

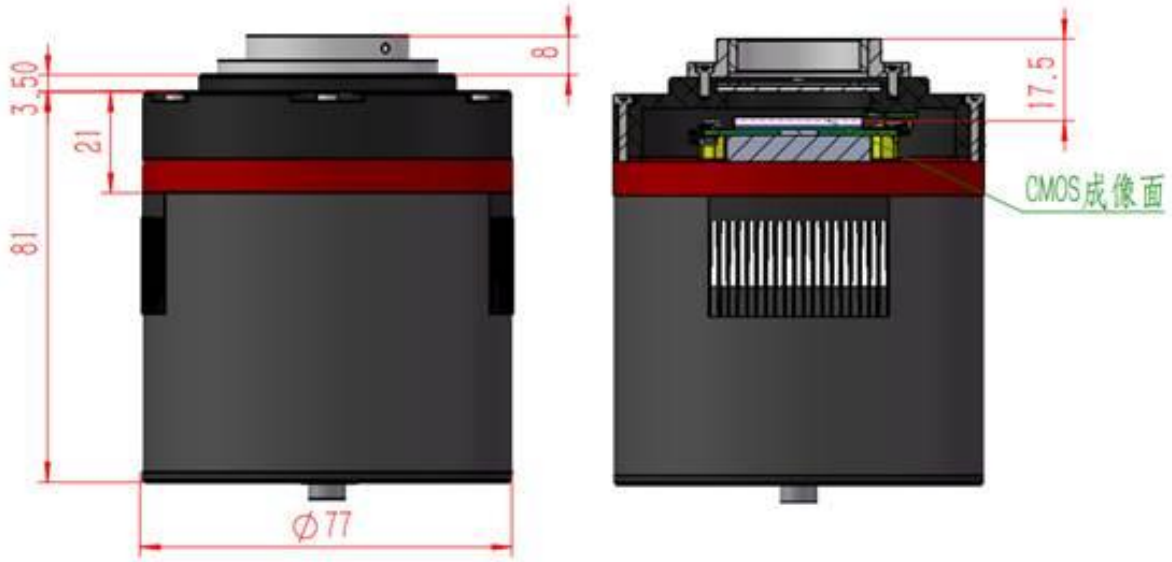

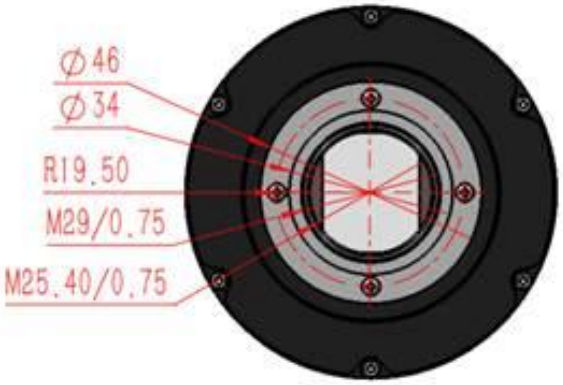

Drawing of QHY183C with C mount

The back focal length of QHY183C with C-adapter lens mount is 17 mm.
Note that C mount is an optional accessory that you can order from us. Its part number is 020051.

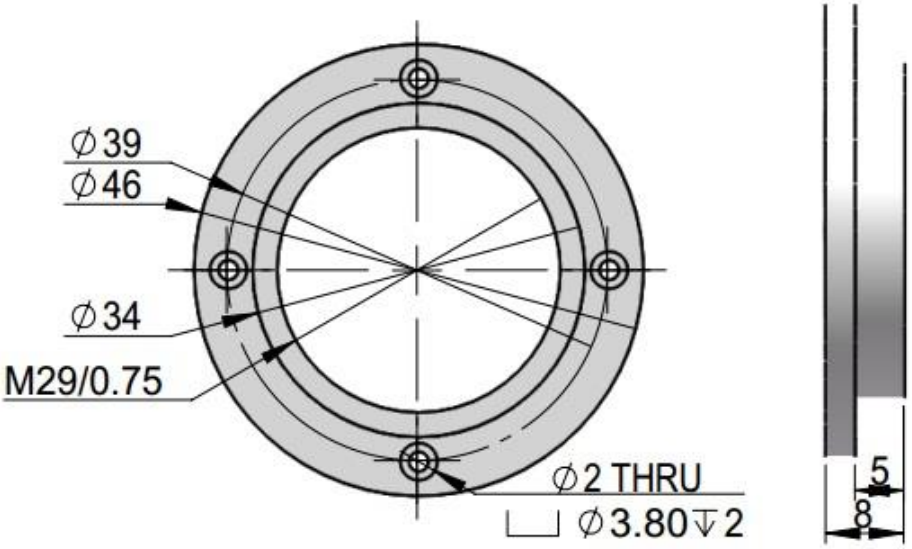

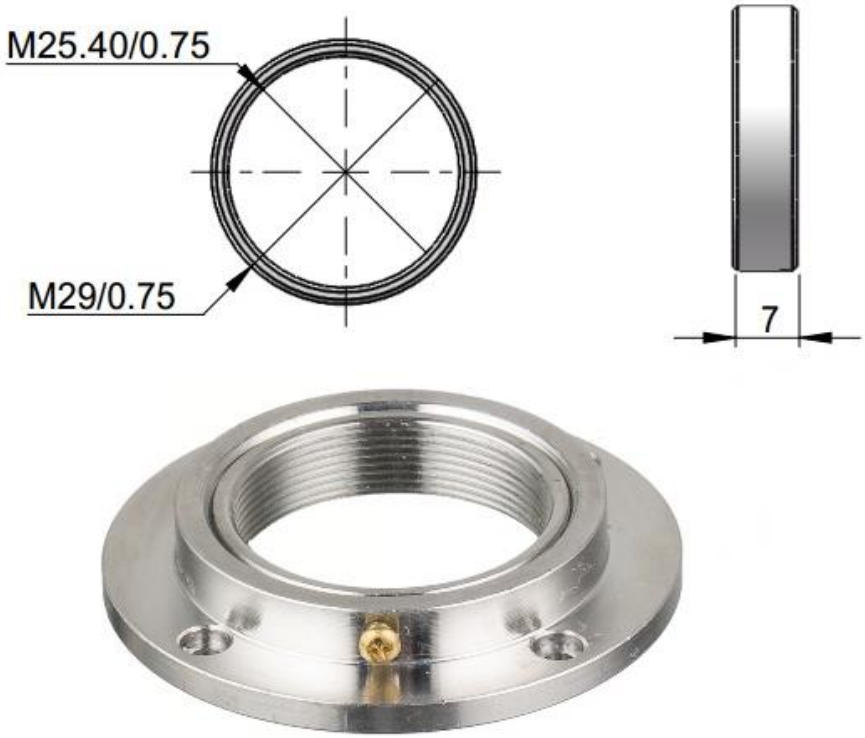

Drawing of QHY183C without mount

There is four M42 screw holes on the R=19.5mm circle. You can use them to connect with other parts.

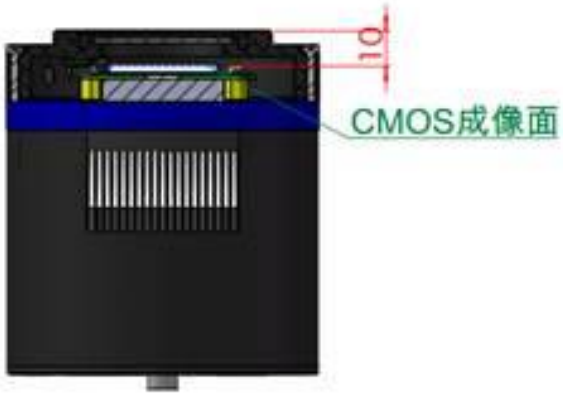

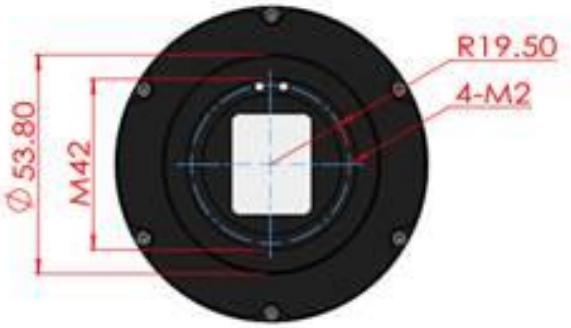

14 Specifications

CMOS Sensor	SONY IMX183 (Back-illuminated Imager)
Effective Area	13.3mm*8.9mm Typical 1 inch
Active Pixel	5544*3694 20 mega pixel
Pixel Size	2.4um*2.4um
QE	TBD
Exposure	50us-3600s
Frame rate	20 mega pixel 15FPS 4K HD 25FPS 12mega pixel 25FPS
Fullwell	15000-16000e
ADC Bit	10 bit and 12bit (output 8bit/16bit, MSB Alignment)
Readout Noise	low 1e@ high gain 2.7e @gain 0
TEC	2-stage TEC with -40C below ambient with temperature regular
Data interface	USB 3.0 high speed interface
Built-in DDR memory	128MB DDR memory
Interface	12v power port, 6pin RJ11 guide port, 4PIN Color Wheel Control Port
Weight	appox 450g (with M42/0.75 adapter)
Software	SharpCap, EZCAP_QT, ASCOM Driver, WDM Driver, Live Video BroadCast Driver. Support FireCapture.