CH-L-60N150-1.0-E 60/150mm f1.0 2-FOV Infrared Lens

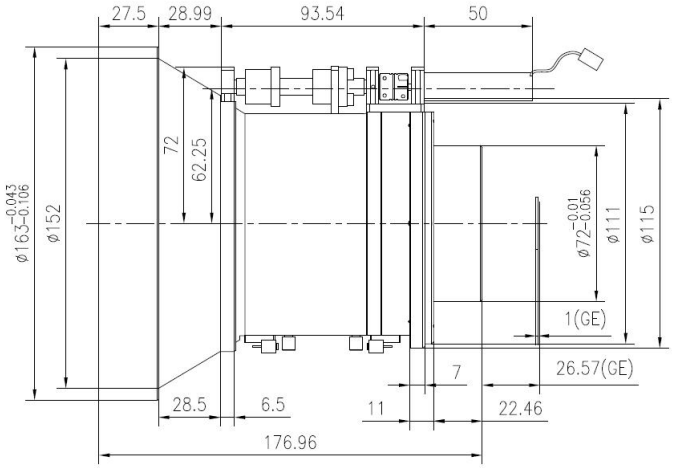

Optical

Focal Length	60mm/150mm (2-FOV)
F/#	1.0
Wavelength	8-12μm

Mechanical

Focus Mechanism	Motorized Dual Vision
Dimensions (mm)	Ø163x200.03
Weight	<2.3Kg

Environmental

Operating Temperature	-40°C to +60°C
Storage Temperature	-50°C to +70°C
Front Element Sealing	IP67
External Coating	DLC