SW137/F1.4

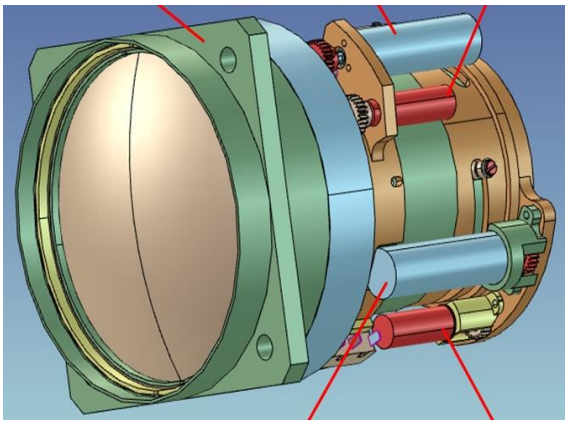

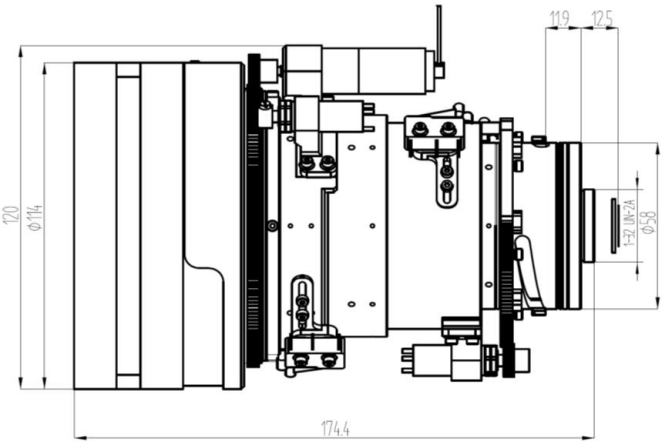

HFOV	640×512	1920×1920
15μ	4°	
5μ		4°

Property	Value
Optical	
Focal Length (mm)	137
F/#	1.4~10
Average Transmission(900~1700nm)	85%
Detector	uncooled
Back Focal Length (mm)	12.5
Mechanical	
Focus Mechanism	Motorized（12V）
Focus Range	30m to infinity
Weight （gr)	≤2000
Max. Dimensions (Diameter×Length)	114×174.4mm
Environmental	
Operating Temperature (℃)	-45 to +60
Storage Temperature (℃)	-55 to +70
Sealing (Front lens only)	IP67
Configurations	
Interface Type	CS Mount
Distortion (%)	≤ 0.7%

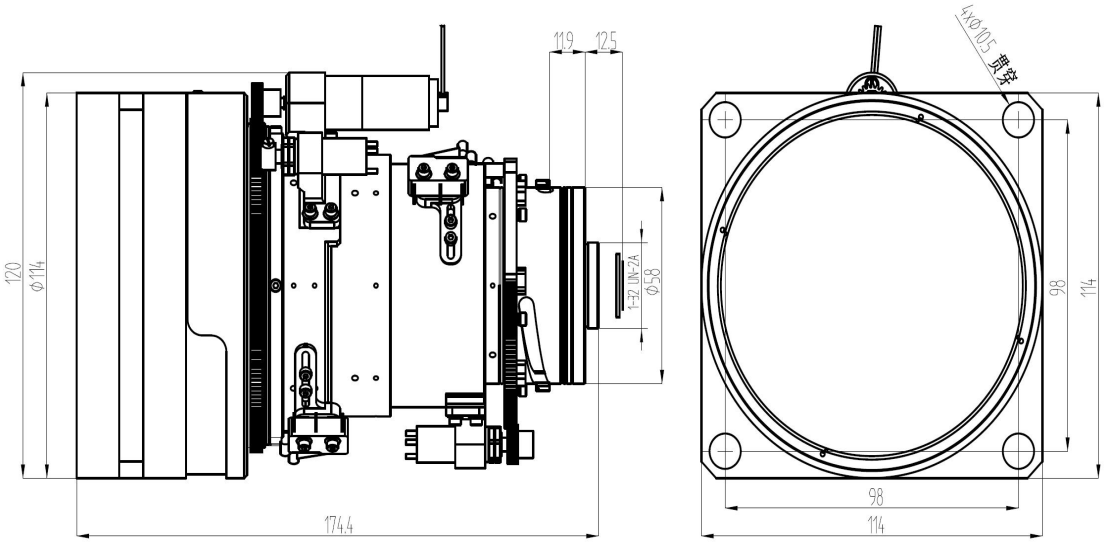

V202411DJ137-1.4v02